Non-Metallic Diaphragm Pump

Award Winning Design!

13 GPM
1/2-inch ports

Performance Specifications

RATIO:	1:1
MAXIMUM G.P.M. (Liters):	13 (49) Ball 10 (37.9) Duckbill Check
DISPLACEMENT GALLONS (Liters) PER CYCLE:	.04 (.15) Ball .032 (.12) Duckbill Check
AIR INLET:	1/4-inch NPT(F)
FLUID INLET:	1/2-inch NPT(F)
FLUID OUTLET:	1/2-inch NPT(F)
MAX. OPERATING PRESSURE PSI (bar):	100 (6.9)
SUSPENDED SOLIDS MAX. DIA. IN. (mm):	3/32-inch (2.4) Duckbill Check- Fibers
WEIGHT - LBS. (Kg):	7.2 (3.3) Polypropylene 8.8 (4) Acetal 9.5 (4.3) Kynar(PVDF)
MAX. DRY SUCTION LIFT:	10 ft. (Teflon fitted)

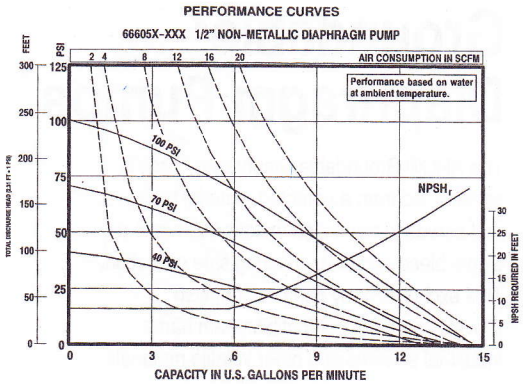

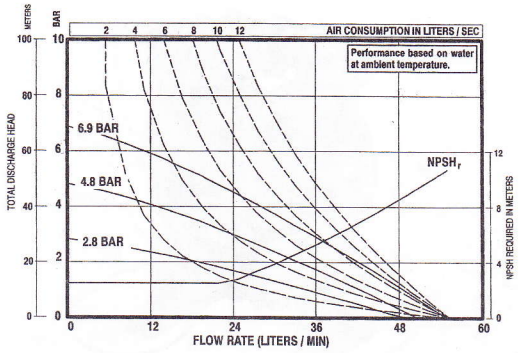

Dimensional Data

Dimensions shown are for reference only.

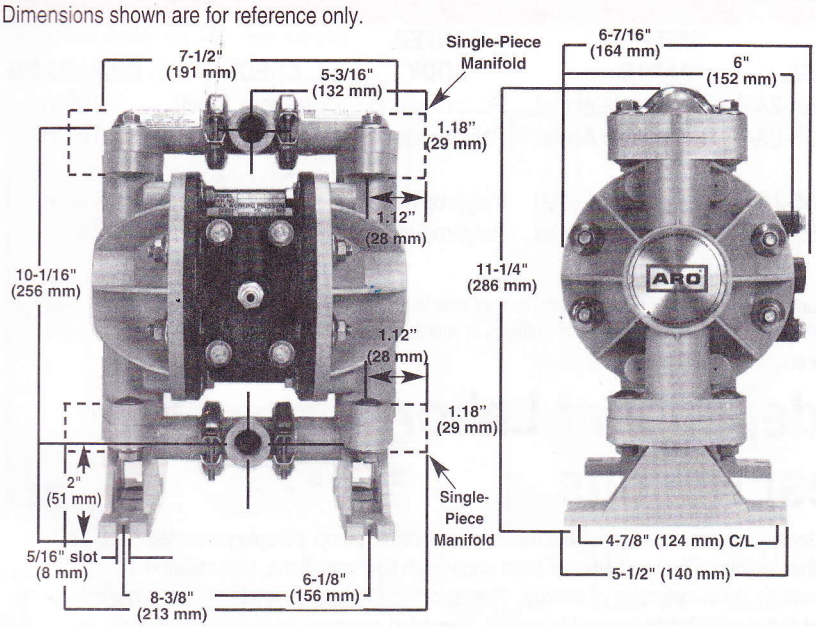

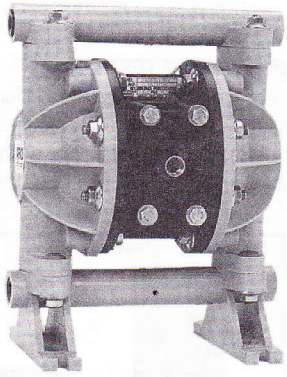

Single-Piece Manifold Model

Model / Material Selection

For recommended key models, refer to the ARO diaphragm pump price book (Form 2240-2). If the specific model you seek is not in the price book, consult the factory for further selection assistance.

6660 X X-X X X

Base Model	Air Motor	Wetted Parts	Check Valve Seats	Ball Check / Diaphragm
6660 1/2" Ball-Duckbill	5 All air motor housings are Polypropylene	J* Polypropylene H* Acetal Groundable K* Kynar(PVDF) 3 Polypropylene 6 Acetal Groundable 7 Kynar (PVDF)	2 Stainless Steel 3 Polypropylene 4 Kynar (PVDF) 6 Acetal - - - - - - - - - - - 0 Duckbill	22 Nitrile/Nitrile 44 Teflon/Teflon 88 Polyurethane/Polyurethane EB Santoprene/Santoprene - - - - - - - - - - - D2 Nitrile/Nitrile

Best Selling Models

66605J-388	66605J-344
66605J-3EB	66605K-444

* Lower Priced Single Piece Manifold Design